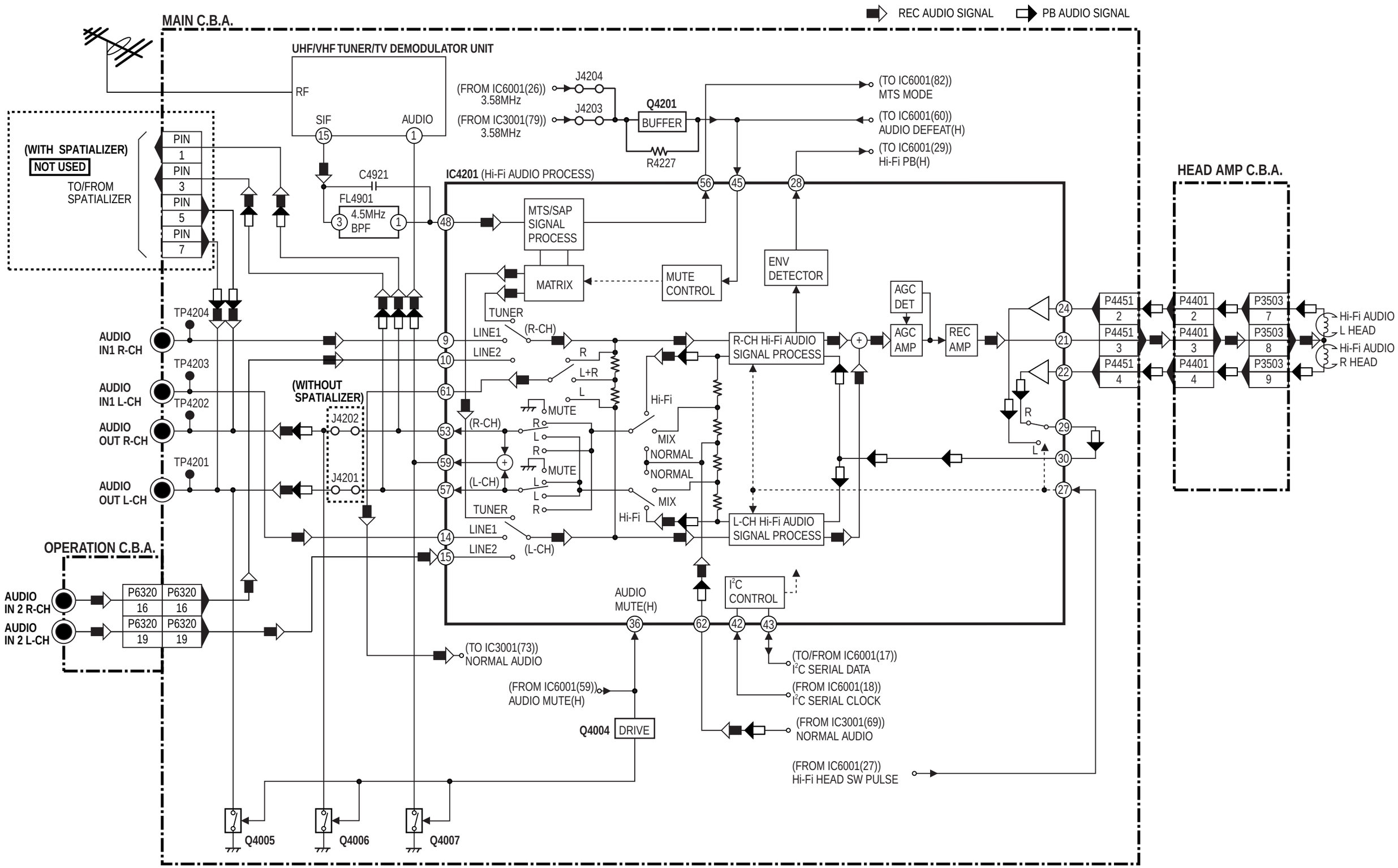
REC AUDIO SIGNAL
PB AUDIO SIGNAL
MAIN C.B.A.
UHF/VHF TUNER/TV DEMODULATOR UNIT
RF
SIF
AUDIO
(WITH SPATIALIZER)
NOT USED
TO/FROM SPATIALIZER
PIN 1
PIN 3
PIN 5
PIN 7
C4921
FL4901
4.5MHz BPF
(FROM IC6001(26)) 3.58MHz
(FROM IC3001(79)) 3.58MHz
J4204
J4203
Q4201
BUFFER
R4227
(TO IC6001(82)) MTS MODE
(TO IC6001(60)) AUDIO DEFEAT(H)
(TO IC6001(29)) Hi-Fi PB(H)
IC4201 (Hi-Fi AUDIO PROCESS)
MTS/SAP SIGNAL PROCESS
MATRIX
MUTE CONTROL
ENV DETECTOR
AGC DET
AGC AMP
REC AMP
R-CH Hi-Fi AUDIO SIGNAL PROCESS
L-CH Hi-Fi AUDIO SIGNAL PROCESS
TUNER
LINE1
LINE2
(R-CH)
(L-CH)
MUTE
Hi-Fi
MIX
NORMAL
AUDIO IN1 R-CH
AUDIO IN1 L-CH
AUDIO OUT R-CH
AUDIO OUT L-CH
TP4204
TP4203
TP4202
TP4201
(WITHOUT SPATIALIZER)
J4202
J4201
HEAD AMP C.B.A.
P4451
P4401
P3503
Hi-Fi AUDIO L HEAD
Hi-Fi AUDIO R HEAD
OPERATION C.B.A.
AUDIO IN 2 R-CH
AUDIO IN 2 L-CH
P6320
AUDIO MUTE(H)
I²C CONTROL
(TO IC3001(73)) NORMAL AUDIO
(FROM IC6001(59)) AUDIO MUTE(H)
Q4004
DRIVE
(TO/FROM IC6001(17)) I²C SERIAL DATA
(FROM IC6001(18)) I²C SERIAL CLOCK
(FROM IC3001(69)) NORMAL AUDIO
(FROM IC6001(27)) Hi-Fi HEAD SW PULSE
Q4005
Q4006
Q4007